Mathematical modeling and parameters estimation of a car crash using data-based regressive model approach

Witold PAWLUS[1], Kjell Gunnar ROBBERSMYR[1], Hamid Reza KARIMI[1],

1. *The University of Agder, Faculty of Engineering and Science, Postboks 509, N-4898 Grimstad, Norway*

witolp09@student.uia.no, {kjell.g.robbersmyr; hamid.r.karimi}@uia.no

ABSTRACT

In this paper we present the application of regressive models to simulation of car-to-pole impacts. Three models were investigated: RARMAX, ARMAX and AR. Their suitability to estimate physical system parameters as well as to reproduce car kinematics was examined. It was found out that they not only estimate the one quantity which was used for their creation (car acceleration) but also describe the car's acceleration, velocity and crush. A virtual experiment was performed to obtain another set of data for use in further research. An AR model to predict the behavior of a low-speed car impacting a rigid barrier was created and verified.

Keywords : regressive models, parameters estimation, viscoelastic modeling, virtual experiment

1. INTRODUCTION

1.1 Challenges

Crash tests are frequently used to help evaluate car safety. Different car safety programs and organizations (e.g. Euro NCAP, NHTSA, NCAC) specify how such tests should be performed, what factors should be investigated and how car safety should be assessed. Crash tests are not only performed when the car design is completed and a prototype is ready but also throughout the whole development and validation process. Car crash test standards and procedures designate detailed test procedures and requirements. Considerable resources are required to successfully conduct car crash tests. These involve skilled and trained personnel along with a large variety and quantity of sophisticated monitoring and measurement equipment and post-crash data analysis software.

1.2 Car modeling

Virtual crash experiments, using mathematical modeling, can help reduce the number of full-scale car tests. Results from these experiments can be used to predict real car behavior, interactions between a car and its occupants, or deformation during a collision.

Currently, lumped parameter modeling (LPM) and finite element method (FEM) are the most popular analytical tools in modeling the car crash performance (Belytschko, 1992; Borovinsek et al., 2007; Deb and Srinivas, 2008; Jonsén et al., 2009). The major advantage of a FEM model is its capability to represent geometrical and material details of the structure. The major disadvantage of FE method is its cost and the fact that it is time-consuming. To obtain good correlation of a FEM simulation with test measurements, extensive representation of the major mechanisms in the crash event is required. This increases costs and the time required for modeling and analysis. In (Eskandarian et al., 1997) a Bogie instead of a real car was modeled and its behavior was compared to the real experiment's results. In the work done by Tenga et al., (2008) a multibody occupant model was constructed and its response for the crash pulse compared favorably with results obtained from the full-scale FE model (modeled in LS-DYNA3D). References (Kim et al., 1996; Soto, 2004; Moumni and Axisa, 2004) illustrate how the complicated, complete mesh model of a car can be further decomposed into less complex arrangements.

The first successful lumped parameter model for the frontal crash of an automobile was developed by Kamal (1970). From then on this technique was extensively used throughout the auto industry for various car models. In a typical lumped parameter model, used for a frontal crash, the car can be represented as a combination of masses, springs and dampers. The dynamic relationships among the lumped parameters are established using Newton's laws of motion and then the set of differential equations is solved using numerical integration techniques. The major advantage of this technique is the simplicity of modeling and the low demand on computer resources. The problem with this method is obtaining the values for the lumped parameters, e.g. mass, stiffness, and damping. In (Pawlus et. al., 2010a; Pawlus et. al., 2010b), a

basic mathematical model is proposed to represent a collision together with its analysis. To be able to analyze a given collision, it is often enough (and more efficient) to study an approximation of the crash pulse. Those approximated functions were compared to experimental pulses in (Varat and Husher, 2000).

A brief overview of different types of car collisions is provided in (Harb et al., 2007; Soica and Lache, 2007). References (Šušteršic et al., 2007; Zhang et al., 2006; Trusca et al., 2009; Vangi, 2009) describe commonly used ways of describing a collision - e.g. investigation of tire marks or the crash energy approach. What is more, neural networks have extremely high potential for creation of car collision dynamic models and their parameters establishment - e.g. in (Pawlus et al., 2010c) values of spring stiffnesses and damping coefficients for lumped parameter models (LPM) were determined by the use of a radial basis artificial neural network (RBFN) and the responses generated by such models were compared with the ones obtained via analytical solutions. Results confirmed the usefulness of this method - correlation with the reference experimental car's behavior was good.

The main contribution of this paper in the area of crashworthiness is an application of regressive models to reproduce car kinematics in the crash event. Proposed methodology is verified with the real experimental data making it possible to directly assess the outcome and usability of the method. Application of the AR model confirmed that one regressive model can be successfully used to predict the behavior of two different cars which undergo deformation. This represents a significant improvement in car crash modeling - fidelity of the obtained model remains high even if it is simulated with the data set which is different than the one used for its establishment.

2. MATHEMATICAL MODELING - THEORETICAL BACKGROUND

We can distinguish two types of mathematical modeling of real world systems (Söderström and Stoica, 1989):

1. Mathematical approach - dynamics of a phenomenon or system is derived from the fundamental law of physics (e.g. Newton's Laws or conservation principle).

2. System identification - experimental approach. After examination of the system by performing on it experiments, model parameters are selected in such a way, that model's behavior fits to the experimental data.

In this paper both methods are presented. For the analytical approach it is desirable to precisely describe the dynamics of a crash test. Due to the fact that such an event is extremely complicated from the mathematical point of view, its model is simplified (see Section 4). On the other hand, models derived from the identification approach do not explain the physical nature of a system - in many cases their parameters do not have any physical interpretation (they are just needed to achieve the satisfactory conformity of a model with the experimental data). Brief characteristics of three different regressive models according to Mendrok (2010) is shown below, to illustrate both of above two methods: 1) estimate the parameters of the physical Kelvin model and 2) create a parametric model which has no physical interpretation.

2.1 AR Model

An Auto Regressive (AR) model is defined as:

$$y(t) = -\sum_{i=1}^{n} a_i y(t-i) + e(t) \tag{1}$$

where:

t - time

$y(t)$ - system's output

a_i - model's parameters

n - model's order

$y(t-1)$ - system's output in the previous moment

$e(t)$ - white noise.

Eq. (1) can be rewritten as:

$$A(q) \cdot y(t) = e(t) \tag{2}$$
$$A(q) = 1 + a_i q^{-1} + \ldots + a_n q^{-n}$$

where q^{-1} is a moving backwards operator. Error of the parameters estimation is determined to be:

$$\varepsilon(t) = y(t) - \hat{y}(t) \tag{3}$$

where $y(t)$ is an input signal to the estimation process and $\hat{y}(t)$ is the estimated signal. AR model according to Eq. (2) can be graphically represented as illustrated in Fig. 1.

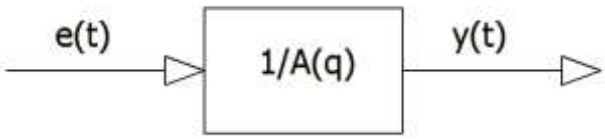

FIGURE 1. AR model.

2.2 ARMAX Model

An Auto Regressive Moving Average with exogenous input (ARMAX) model is defined as:

$$y(t) + a_i y(t-1) + \ldots + a_{na} y(t-n_a) = \tag{4}$$
$$b_1 u(t-n_k) + \ldots + b_{nb} u(t-n_k-n_b+1) + c_1 e(t-1) + \ldots + c_{nc} e(t-n_c) + e(t)$$

where:

t - time

y(t) - system's output

$a_1, \ldots, a_{na}$ $b_1, \ldots, b_{nb}$ $c_1, \ldots, c_{nc}$ - model's parameters

n_a - number of model's poles

n_b - number of model's zeros +1

n_c - number of model's parameters in the C vector

n_k - order of delay

$y(t-1), \ldots, y(t-n_a)$ - system's output in the previous moment

$u(t-n_k), \ldots, u(t-n_k-n_b+1)$ - system's input in the previous moment

$e(t-1), \ldots, e(t-n_c)$ - white noise.

ARMAX model can also be defined as:

$$A(q)y(t) = B(q)u(t-n_k) + C(q)e(t) \tag{5}$$

where *A*, *B*, and *C* are expressed as functions of *q:*

$$A(q) = 1 + a_1 q^{-1} + \ldots + a_{na} q^{-na}$$

$$B(q) = b_1 + b_2 q^{-1} + \ldots + b_{nb} q^{-nb+1}$$

$$C(q) = 1 + c_1 q^{-1} + \ldots + c_{nc} q^{-nc}$$

ARMAX model's schematic representation is presented in Fig. 2.

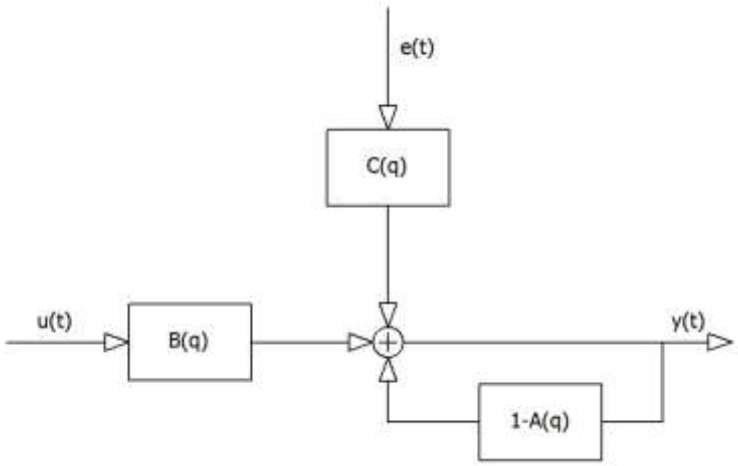

FIGURE 2. ARMAX model.

2.3 RARMAX Model

Regressive models based on recursive methods are often used for non-stationary systems (i.e. changeable in time). RARMAX model (Recursive ARMAX) is presented here. To establish this model one needs to follow the procedure described below.

1. Record the system's output (response).

2. Calculate the prediction error estimator.

$$\hat{\varepsilon}(t) = y(i) - \Theta^T(i-1)\varphi(i)$$

3. Create the auxiliary vectors *f* and *g* and record the forgetting factor $\lambda_0 = \lambda$.

$$f = U^T(i-1)\varphi(i)$$
$$g = D(i-1)f$$

4. Calculate the particular elements of the matrix *U(i)* for *k=1, ..., j-1* (where *j>1*).

$$U_{kj}(i) = U_{kj}(i-1) - \frac{v_k f_j}{\lambda_{j-1}}$$
$$v_k = v_k + U_{kj}(i-1)v_j$$

where $U_{kj}(i)$ denotes a particular element of the *U(i)* matrix.

5. Update the amplification vector.

$$L(i) = \frac{v}{\lambda_d}$$

For j=1, ..., n_θ repeat points 4 and 5.

6. Calculate the particular elements of the *D(i)* matrix.

$$\lambda_j = \lambda_{j-1} + f_j g_j$$
$$D_j(i) = (\lambda_j \lambda)^{-1} \lambda_{j-1} D(i-1)$$
$$v_j = g_j$$

where λ_j is a scalar, f_j, g_j, D_j, and v_j are elements of the particular vectors. Apart from that it is required to update the vector of the estimated parameters of the model $\hat{\Theta}(i)$.

7. Record the next sample and move again to the 1st point of this procedure.

It should be noted that:

$\Theta(i)$ - vector of the model's parameters (dimensions: $n_\Theta \times 1$)

$\varphi(i)$ - regressor vector (dimensions: $n_\Theta \times 1$)

The important element in this model is the so-called forgetting factor, which determines both the speed of the algorithm's reaction to variation of model parameters and the quality of the estimated model. Its practical range of values lies in the interval from 0.9 to 1.0 (when forgetting factor is equal to 1.0, then RARMAX model degenerates into ARMAX configuration). The value of the forgetting factor should be chosen according to the dynamics of a process.

3. CRASH TEST DESCRIPTION

This section has been elaborated according to Pawlus and Nielsen (2010). The data used come from the typical car-to-pole collision (Robbersmyr, 2004) - the sequence of the crash is illustrated in Fig. 3.

FIGURE 3. Steps of the experiment recorded by the high-speed camera.

A test car was subjected to impact with a vertical, rigid cylinder. During the test, the acceleration was measured in three directions (longitudinal, lateral and vertical) together with the yaw rate from the car's center of gravity. The acceleration field was 100 meters long and had two anchored parallel pipelines. The pipelines have a clearance of 5 mm to the front wheel tires. The force to accelerate the test car was generated using a truck and a tackle. The release mechanism was placed 2 m before the end of the pipelines and the distance from there to the test item was 6.5 m. The car was steered using the pipelines that were bolted to the concrete runaway. The experimental scheme is shown in Fig. 4.

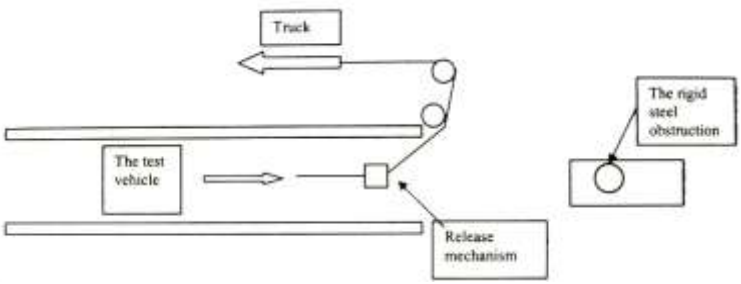

FIGURE 4. Scheme of the crash test.

3.1 Description of the car and pole

The initial velocity of the car was 35 km/h, and the mass of the car (together with the measuring equipment and dummy) was 873 kg. The pole was constructed with two components: a baseplate and a pipe. Both of them were made of steel. The baseplate had dimensions 740x410x25 mm. The pipe had length 1290 mm and overall diameter equal to 275 mm. The pipe was filled with concrete and mounted on a concrete foundation with 5 bolts. These bolts connected the concrete foundation with the baseplate of the obstruction which was fixed to the shovel of a bulldozer - see Fig. 5.

FIGURE 5. Obstruction.

3.2 Instrumentation

During the test, the acceleration at the center of gravity in three dimensions (x - longitudinal, y - lateral and z - vertical) was recorded. The car speed before the collision was measured. The yaw rate was also measured with a gyrometer. Using normal speed and high-speed video cameras, the behavior of the safety barrier and the test car during the collision was recorded - the video recorder arrangement is presented in Fig. 6.

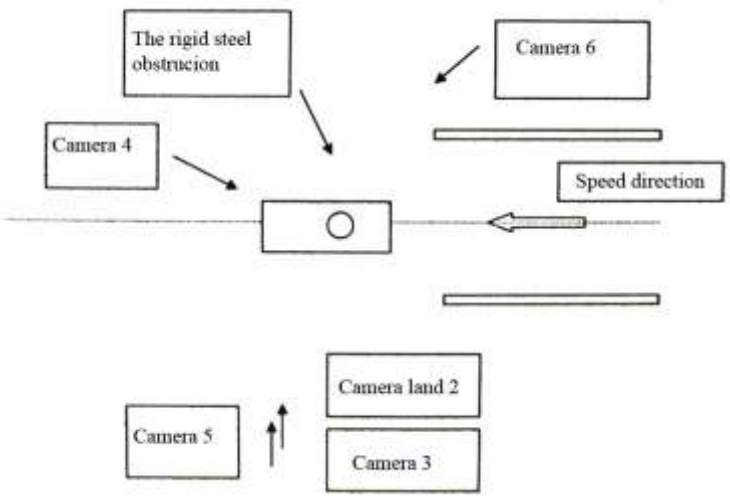

FIGURE 6. Cameras layout.

A 3-D accelerometer was mounted on a steel bracket close to the car's center of gravity and it was fastened by screws to the car's chassis. Data from the sensor was fed to an eight channel data logger and subsequently sampled with a frequency of 10 kHz. The memory was able to store 6.5 sec of data per channel. The velocity of the car was checked by an inductive monitor. It was directed towards a perforated disc mounted on a wheel on the right side of the test car. Fig. 7 shows the car before, during and after the collision.

FIGURE 7. Car's deformation.

3.3 Crash pulse analysis

Having at our disposal the acceleration measurements from the collision, we are able to describe in details the car's motion. Since it is a central impact, it is sufficient to analyze only the pulse recorded in the longitudinal direction (x-axis). By integrating car's deceleration, plots of velocity and displacement are obtained - see Fig. 8.

At the time when the relative approach velocity is zero, the maximum dynamic crush occurs. The relative velocity in the rebound phase then increases negatively up to the final separation (or rebound) velocity, at which time a car rebounds from an obstacle. The contact duration of the two masses includes both contact times in deformation and restitution phases. When the relative acceleration becomes zero and relative separation velocity reaches its maximum recoverable value, the separation of the two masses occurs. From the crash pulse analysis the data listed in Table 1 is obtained.

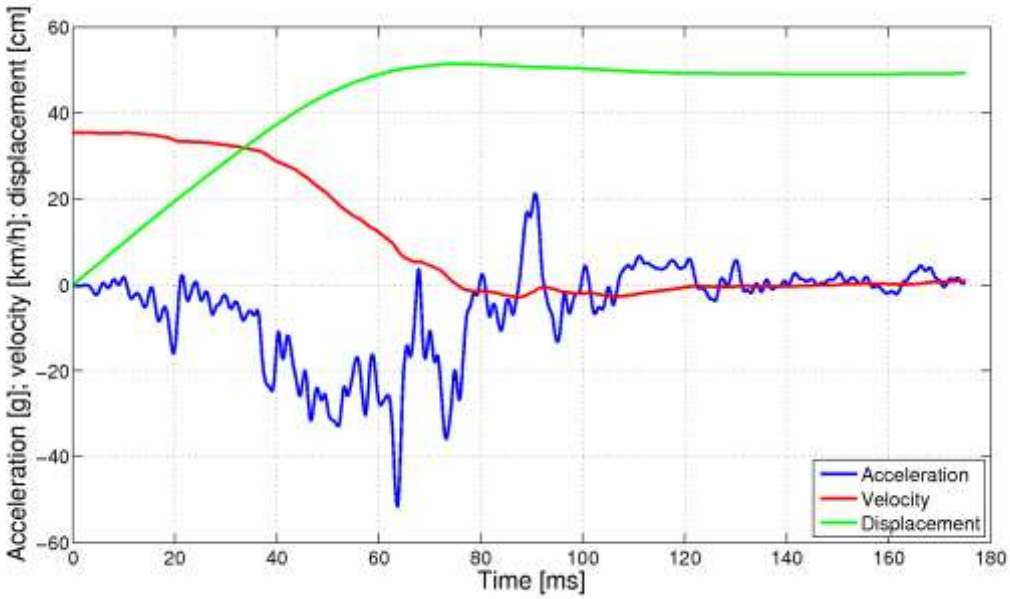

FIGURE 8. Car's kinematics.

TABLE 1. Characteristic factors of the car to pole collision.

Initial impact velocity **V [km/h]**	**Rebound velocity** **V ′ [m/s]**	**Dynamic crush** **d_c [cm]**	**Permanent deformation** **d_p [cm]**	**Time of maximum dynamic crush** **t_m [ms]**
35	7	52	50	76

4. KELVIN MODEL OVERVIEW

Since a car collision is a dynamic event, it involves energy transformation. Therefore to simulate car's behavior it is justified to represent it schematically as a viscoelastic element (combination of masses, springs and dampers). The considerations included in this paper are based upon the simple Kelvin model. The information elaborated in this section have been taken from Pawlus and Nielsen (2010).

4.1 Kinematic relationships

The Kelvin model is an arrangement in which a spring and damper are connected in parallel to a mass see Fig. 9.

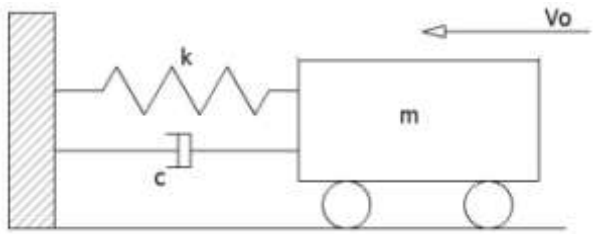

FIGURE 9. Kelvin model.

Let us introduce the following notation:

k - spring stiffness [N/m]

c - damping coefficient [Ns/m]

m - mass [kg]

v_0 - initial impact velocity [m/s]

α - displacement of the mass [m]

ζ - damping factor

ω_e - circular natural frequency [rad/s].

In the majority of cases the response of such a system is underdamped, therefore emphasis is put here on this type of behavior. Equation of motion (EOM) for Kelvin model has the following form:

$$\ddot{\alpha} + 2\zeta\omega_e \dot{\alpha} + \omega_e^2 \alpha = 0 \tag{6}$$

where $\zeta = \dfrac{c}{2m\omega_e}$ and $\omega_e = \sqrt{\dfrac{k}{m}}$

Its characteristic equation looks like this:

$$s^2 + 2\zeta\omega_e s + \omega_e^2 = 0 \tag{7}$$

Roots of the characteristic equation are equal to: $s_1 = a + ib$ and $s_2 = a - ib$ where $a = -\zeta\omega_e$; $b = \beta\omega_e$ and $\beta = \sqrt{1-\zeta^2}$. Therefore the general solution of Eq. (7) is given by:

$$\alpha = e^{at}\left[c_1 \sin(bt) + c_2 \cos(bt)\right] \tag{8}$$

where c_1 and c_2 are integration constants which are calculated based on the initial conditions of the displacement and velocity at the time zero. Transient responses of the underdamped system are displacement, velocity and acceleration, respectively:

$$\alpha(t) = \frac{v_0 e^{-\zeta\omega_e t}}{\sqrt{1-\zeta^2}\,\omega_e} \sin(\sqrt{1-\zeta^2}\,\omega_e t) \tag{9}$$

$$\dot{\alpha}(t) = v_0 e^{-\zeta\omega_e t}[\cos(\sqrt{1-\zeta^2}\,\omega_e t) - \frac{\zeta}{\sqrt{1-\zeta^2}}\sin(\sqrt{1-\zeta^2}\,\omega_e t)] \tag{10}$$

$$\ddot{\alpha}(t) = v_0 \omega_e e^{-\zeta\omega_e t}[-2\zeta\cos(\sqrt{1-\zeta^2}\,\omega_e t) + \frac{2\zeta^2-1}{\sqrt{1-\zeta^2}}\sin(\sqrt{1-\zeta^2}\,\omega_e t)] \tag{11}$$

4.2 Appropriateness of the Kelvin model to the regressive models identification methods

To better understand the nature of a Kelvin model's motion, let us visualize it as presented in Fig. 10.

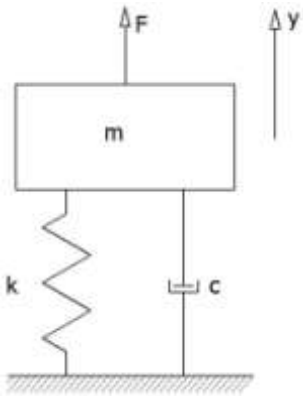

FIGURE 10. Spring-mass-damper model.

Let us add the following new denotations:

F - external force [N]

y - displacement of the mass [m].

Equation of motion of the mass is given by:

$$F = m\frac{d^2y}{dt^2} + c\frac{dy}{dt} + ky \tag{12}$$

We can rewrite Eq. (12) as:

$$u(t) = m\ddot{y} + c\dot{y} + ky \tag{13}$$

where u(t) is an external force changing in time and $\ddot{y}$ and $\dot{y}$ denotes second and first derivative from the displacement i.e. acceleration and velocity, respectively. In this paper the regressive models are used to estimate parameters of the Kelvin model. However, to validate such a model, apart from the proper initial condition (which is the initial impact velocity) and the estimated parameters, it is also needed to know an input to the model. Eq. (13) designates that this is a force which changes in time. Now the question is, what is the input to the system in the case of a real car's crush? The acceleration measured throughout the collision is nothing else but the system's output. Is it possible to translate this measured acceleration into the system's input? To answer this question one needs to find out what causes the car's deformation. The answer is of course - force. Relationships between force acting on a car and its deformation are covered in Pawlus et al. (2010d). Basing on it, we conclude that the force which acts on a car during a collision is nothing else but the acceleration recorded during the collision and taken with the opposite sign, multiplied by the car's mass according to the Newton's 2nd Law. Then the term *u(t)* from Eq. (13) becomes $-m\ddot{y}$.

Therefore to validate the Kelvin models which have parameters estimated by the regressive models, as their inputs it should be provided the recorded acceleration pulse taken with the opposite sign, according to the modified Eq. (13):

$$-m\ddot{y} = m\ddot{y} + c\dot{y} + ky \tag{14}$$

$$\ddot{y} = -\ddot{y} - \frac{c}{m}\dot{y} - \frac{k}{m}y \tag{15}$$

5. MODELING OF THE CRASH TEST

5.1 RARMAX model - physical system

Based on the information presented in Section 2 and Section 4 a Kelvin model is created to simulate car-to-pole collision. Two RARMAX models with different values of the forgetting factor are established. As an input to those regressive models it is provided the car's crush, whereas parameters n_a and n_b are set to be equal to 2. In the first case we check what the Kelvin model's parameters (we get them from converting its estimated modal parameters like damping factor and natural frequency into spring stiffness and damping coefficient) and output are when the forgetting factor is equal to 0.90. Due to the fact that the RARMAX model is long (sampling rate for the experiment is 10 kHz and the crash time interval is 175 ms, so there are 1751 samples) its full version is not presented it here. Results of the simulation are shown in Fig. 11 and the estimated Kelvin model's parameters are included in Table 2. It is worth mentioning that the initial condition for the Kelvin model is exactly the same as the initial impact velocity (35 km/h). Model-estimated displacement, velocity, and acceleration are in close agreement with observed values for these variables. The existence of slight discrepancies between observed and modeled velocity and crush indicate a need to evaluate the model using a range of forgetting factor values.

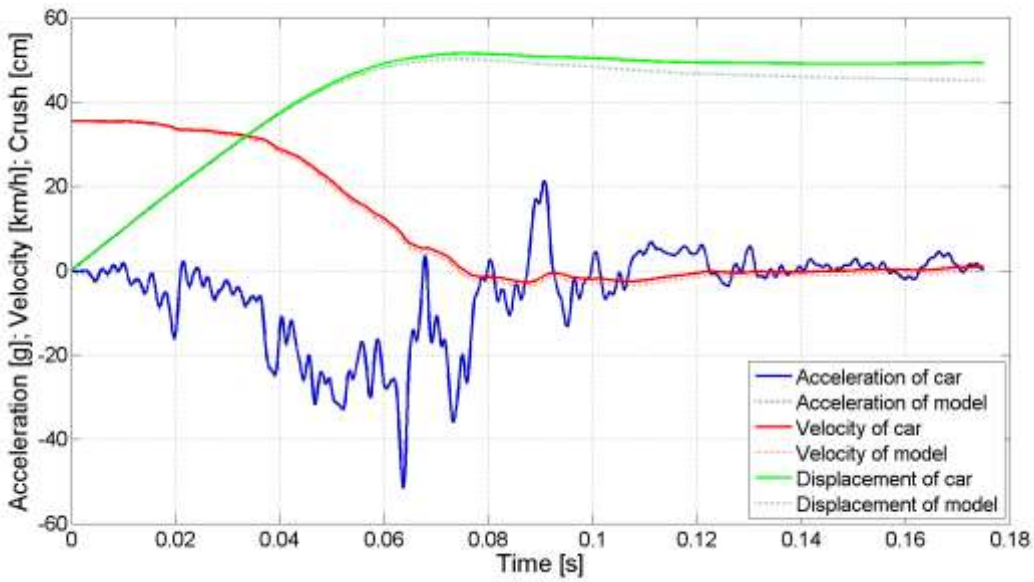

FIGURE 11. Performance of the Kelvin model established for the RARMAX model with the forgetting factor equal to 0.90.

TABLE 2. Kelvin model parameters (RARMAX forgetting factor = 0.90).

Stiffness k [N/m]	Damping c [Ns/m]
80	530

See Fig. 12 to examine what the kinematics of the Kelvin model established for RARMAX model with the forgetting factor equal to 0.988 is.

As expected, the model's behavior is better for the increased forgetting factor. All of the three model's responses (acceleration, velocity, and displacement) match the original signals. To investigate the changes in the spring stiffness and damping coefficient with respect to the previous model refer to Table 3. It should be noted that in both Kelvin systems, the mass of the model is *m = 873 kg* (the same as the mass of the car).

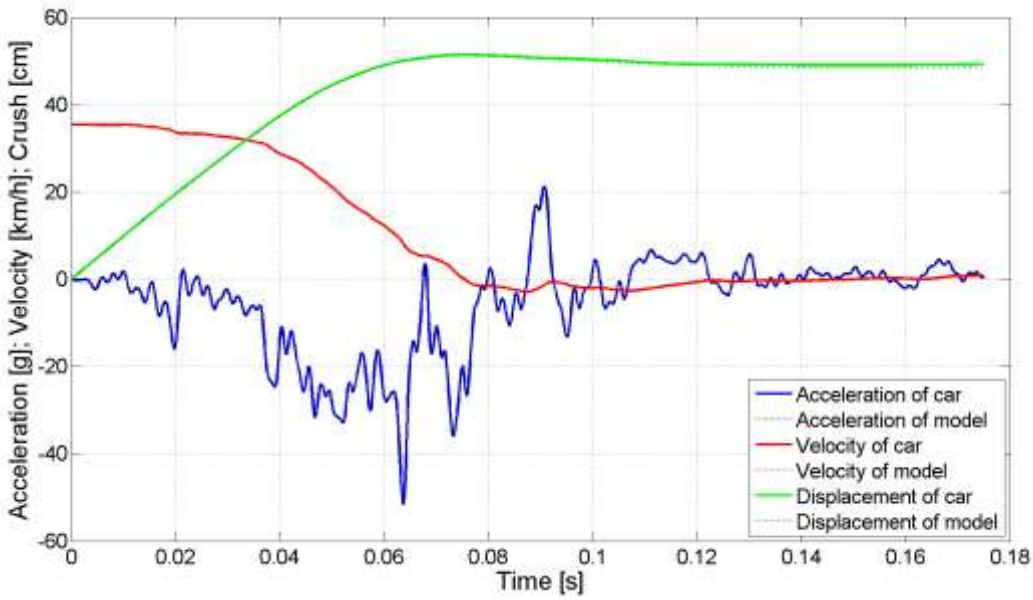

FIGURE 12. Performance of the Kelvin model established for the RARMAX model with the forgetting factor equal to 0.988.

TABLE 3. Kelvin model parameters (RARMAX forgetting factor = 0.988).

Stiffness k [N/m]	Damping c [Ns/m]
4	115

5.2 ARMAX model - parametric model

In this Section the second approach described in Section 2, i.e. system identification, is analyzed. We do not establish a Kelvin model to represent car-to-pole collision but we create a parametric model of the event - we are not interested now in finding the modal parameters of the Kelvin model which, when excited with the recorded acceleration pulse, would produce the response possibly most similar to the real car's crush but we only simulate the created ARMAX model. As an input to this model we provide the recorded acceleration (differently than we did for the RARMAX model - there we used the car's displacement). Since this type of data is a regular time series, the order of ARMAX model is specified by the parameters n_a and n_c. For our purposes it was assumed that $n_a = n_c = 2$. The ARMAX model is as follows:

$$A(q)y(t) = C(q)e(t) \tag{16}$$
$$A(q) = 1 - 1.97 \cdot q^{-1} + 0.9722 \cdot q^{-2}$$
$$C(q) = 1 + 1.654 \cdot q^{-1} + 0.8181 \cdot q^{-2}$$

It is worth mentioning that this is a particular case of an ARMAX model in which $n_b = 0$. If we assume that *A(q)* contains the expression $1-q^{-1}$, then we call such a model an Auto Regressive Integrated Moving

Average (ARIMA). Simulation results using this model formulation are presented in Fig. 13. The validation criterion applied is to achieve the high accuracy of the models' response - the error plots (measured values minus model's predictions) are shown in Fig. 14. Estimated signals provide an exact match to the reference values - errors are negligible.

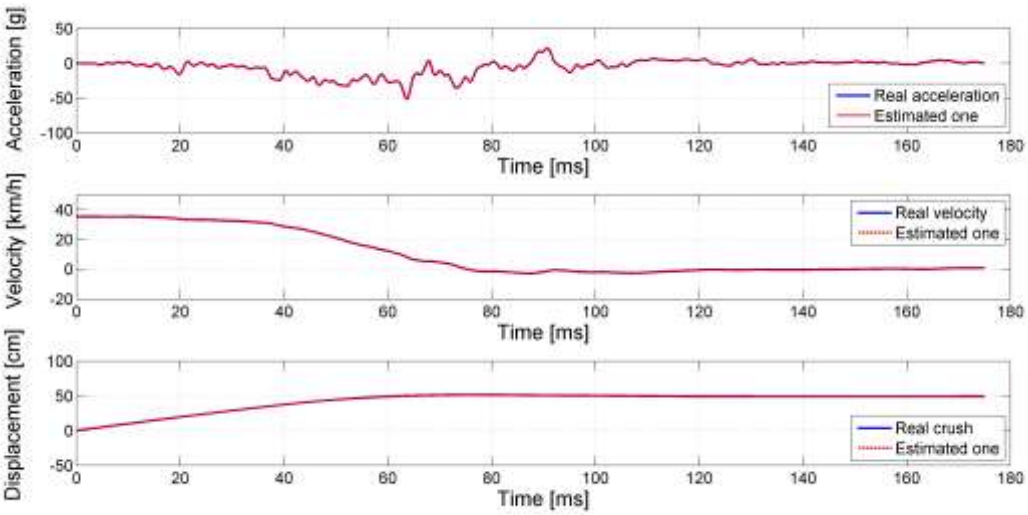

FIGURE 13. ARMAX model simulation results.

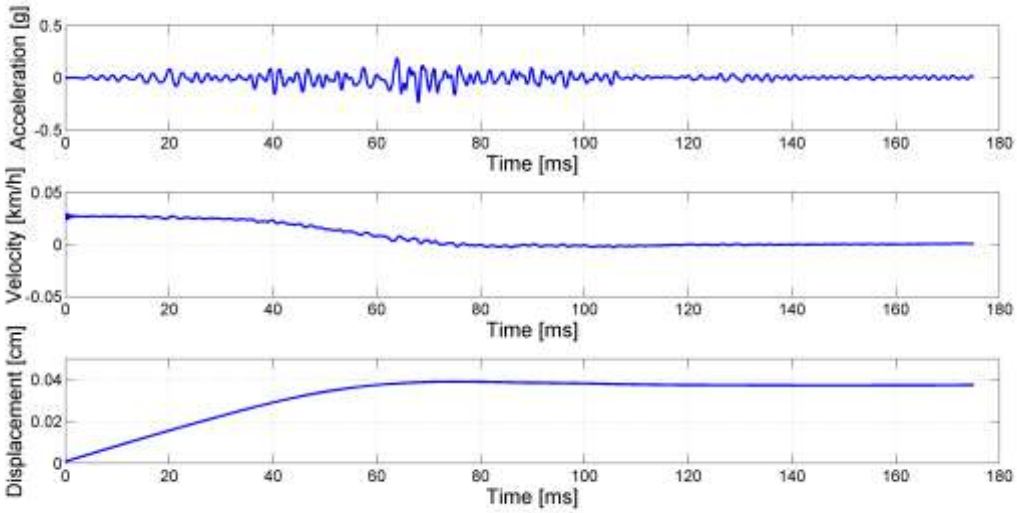

FIGURE 14. ARMAX model's prediction error plots.

6. VIRTUAL CRASH TEST DESCRIPTION

One of the methods shown in Section 5 allows us to obtain the parameters of the real, physical models (e.g. Kelvin model). One needs to keep in mind that they are valid only for one certain collision type and conditions (e.g. car-to-pole central collision with a given initial impact velocity). Since it is of interest to establish a model (not necessarily a physical one) which can be successfully applied to the greatest number of crash tests, an additional crash test data for validation of a new regressive model is required. Because of the fact that the data from only one full-scale crash test was available, it was necessary to perform a virtual experiment in order to acquire measurements needed to assess model's suitability. That is the reason to perform it - not to simulate the analyzed full-scale crash test, but to give a new set of measurements for models validation.

6.1 Preliminary considerations

To obtain the same quantity as the one which was measured during the real crash test (i.e. car's acceleration at its center of gravity - COG) we need to perform a virtual experiment. To make it as reliable as possible, we decided to reproduce one of the huge numbers of collisions presented in (Huang, 2002). The selected crash was a typical low-speed mid-size car collision with a rigid barrier: initial impact velocity was equal to 14 mph (around 22 km/h), dynamic crush was 12 in (around 30 cm) and the time at which it occurred was close to 80 ms. Our goal was not only to make our virtual car satisfy those three main conditions throughout the test but also to follow the overall plots of acceleration, velocity and displacement of the reference real car. We purposefully selected a low speed collision (22 km/h compared to 35 km/h from the real crash test presented in Section 3) and similar car type and dimensions to establish a model applicable to two different collision types and two different initial impact velocities (however, to the similar car's type).

6.2 Methodology and assumptions

We did not employ any FEM software to perform this experiment. Our intent was to build a multibody car model. We have divided the front part of the car into 6 undeformable components as one can assume that in such a type of collision only this car's section undergoes the deformation. To simulate elasto-plastic properties of the car's body, its particular components were connected with springs and dampers - see Fig. 15.

FIGURE 15. Scheme of the virtual experiment.

Numbers from 1 to 6 designate particular springs with damping properties (see Table 4). Initial impact velocity has been set to be 22 km/h. It is worth mentioning here that to properly simulate the impact it is necessary to assign this velocity to every car's portion. What is more, the whole model is constrained in such a way, that its motion is possible only in one direction - longitudinal. By doing this we analyze only its longitudinal acceleration component - the same as we did in Section 3. The whole simulation and measurements were also simplified by not considering e.g. the car's angular motion (yaw rate).

6.3 Detailed car's description

The most relevant dimensions of the car are shown in Fig. 16. They were assigned to fulfill the overall mid-size car geometrical requirements.

It is noting that the space in the front part of the car provided to attach the springs in the further stage of the simulation. This space is left for the motion of the deformable hood and represents the possible crush which may occur during the collision. This explains why the more we approach the car's body, the less deformation it experiences. Mass distribution was assigned by considering real car's behavior - e.g. the front part of the hood is not heavy, on the other hand, the axle together with wheels and engine weigh more - see Fig. 17. The assumed mass of the whole car is equal to 1000 kg.

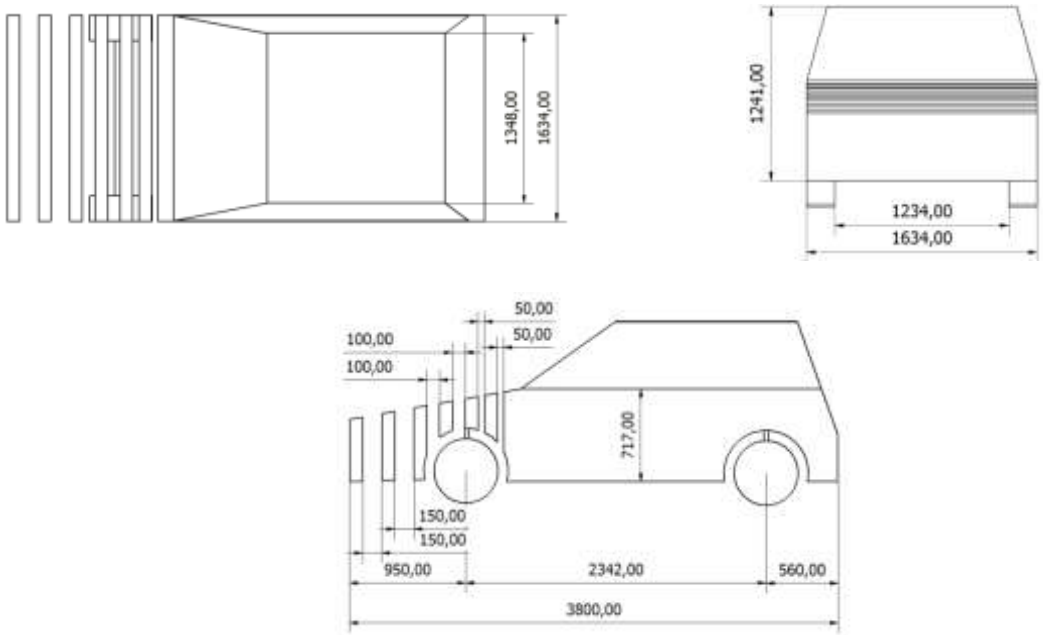

FIGURE 16. Virtual car's characteristic dimensions.

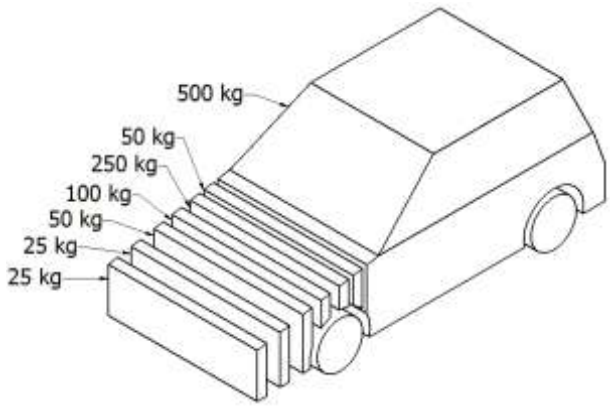

FIGURE 17. Mass distribution.

To make the car follow the reference car's behavior from (Huang, 2002), values of the particular spring's stiffnesses and damping coefficients were assigned in the trial and error method - see Table 4.

TABLE 4. Values of damping and stiffness for each spring.

Spring number	1	2	3	4	5	6
Stiffness [kN/m]	90	500	100	800	600	30
Damping [kNs/m]	70	80	10	6	10	70

6.4 Simulation results

Sampling rate for the virtual experiment is exactly the same as the one for the real collision elaborated in Section 3 - i.e. 10 kHz. Similarly, the acceleration was measured in the car's center of gravity (COG) - virtual experiment's outcome is shown in Fig. 18.

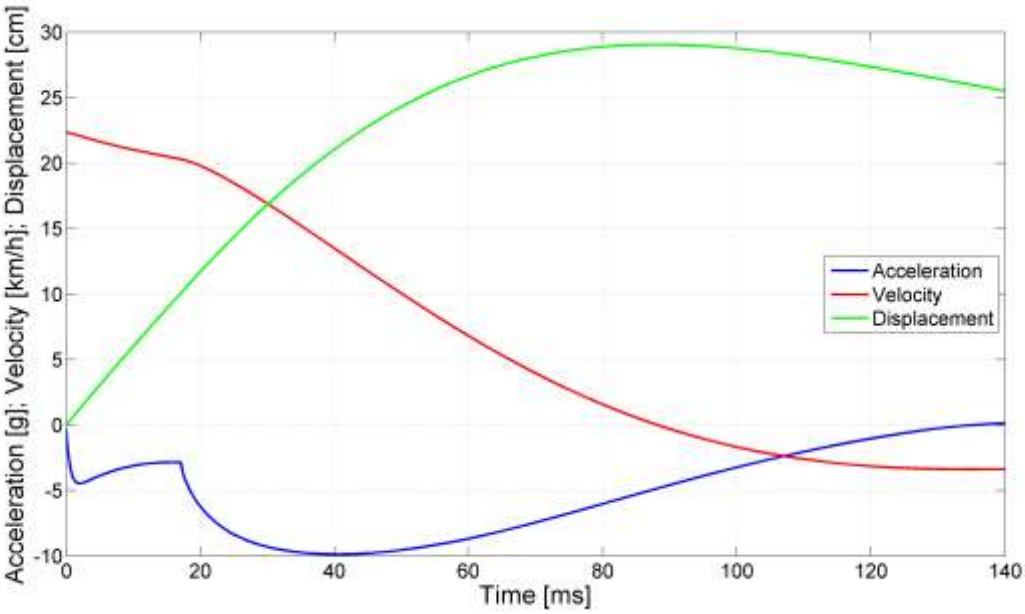

FIGURE 18. Virtual experiment's results.

Keep in mind that the response obtained from the virtual crash test should be treated as the approximated crash pulse since it is not possible to get such a rapidly changing acceleration plot (as obtained in the real experiment) in this kind of simulation. However, the results are satisfactory because the obtained virtual car's deformation and modeled velocity and acceleration closely follow the reference ones from (Huang, 2002). See Table 5 for the most relevant crash pulse characteristic parameters.

TABLE 5. Characteristic factors of the virtual crash test.

Initial impact velocity **V [km/h]**	**Rebound velocity** **V ′ [km/h]**	**Dynamic crush** **d_c [cm]**	**Permanent deformation** **d_p [cm]**	**Time of maximum dynamic crush** **t_m [ms]**
22	3.2	29	25	88

7. AR MODEL'S PERFORMANCE

Of key importance to us is to establish a regressive model which can be successfully applied to simulate a different crash event than the one which has been used to create it. Therefore as an input to the AR model we provide the real car's crush. We use an AR model (because we are working on the scalar time series) of order n = 2. Established model has the following form:

$$A(q)y(t) = e(t) \tag{17}$$

$$A(q) = 1 - 2 \cdot q^{-1} + q^{-2}$$

Now we validate the model for the real crash test data (i.e. the data which were used for its creation) as well as for the virtually measured ones (i.e. the ones which we would like the model to reproduce without knowing them beforehand). Results are shown in Fig. 19, Fig. 20, and Fig. 21 (acceleration, velocity, and displacement, respectively). Fig. 22 and Fig. 23 present error plots for kinematics of a real and virtual car, respectively.

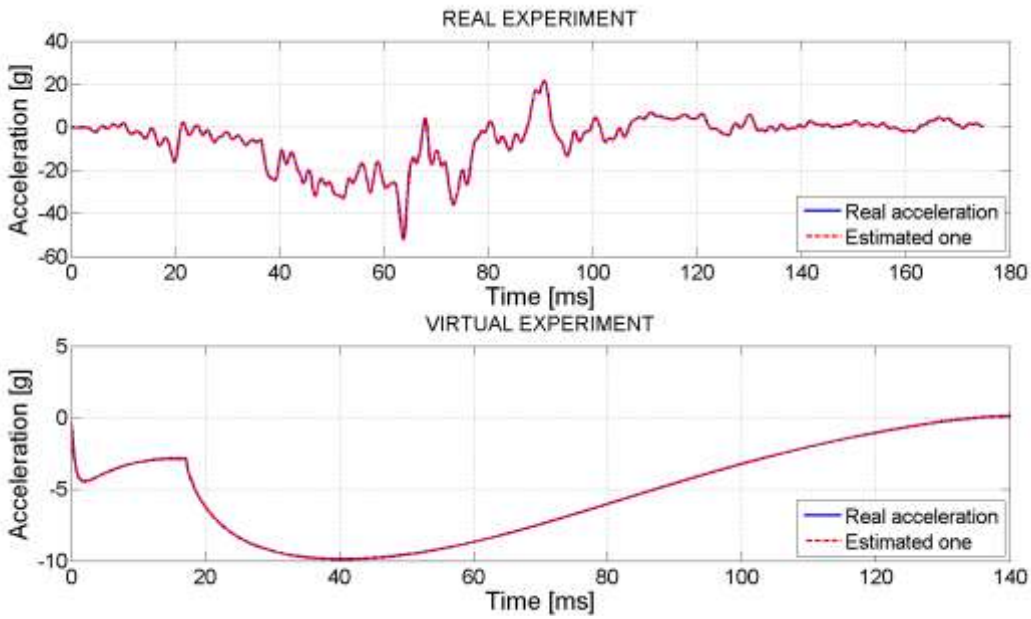

FIGURE 19. Comparative analysis of the measured acceleration and the one predicted by the AR model for real and virtual experiment.

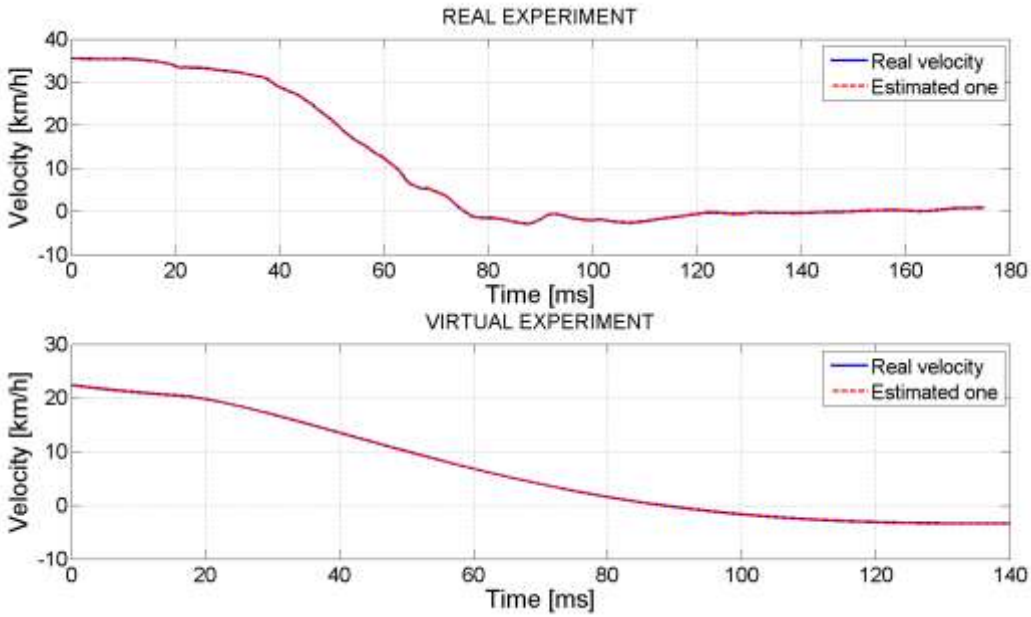

FIGURE 20. Comparative analysis of the measured velocity and the one predicted by the AR model for real and virtual experiment.

Model's output follows the reference plots with high accuracy. The 2nd order AR model can not only reproduce the data set which was used for its establishment - i.e. car's crush (and consequently: its velocity and acceleration), but of more significance, another data set, unknown to it during the creation process. This allows us to reproduce the kinematics of a different car and different collision conditions (e.g. initial impact velocity). Moreover, the errors coming from the AR model prediction are so small, that they can be neglected. It is especially visible for a virtual car: since its kinematic responses are smooth, the errors are more likely to achieve a steady value of zero, compared to the AR model prediction errors for a real experiment, which oscillate about zero.

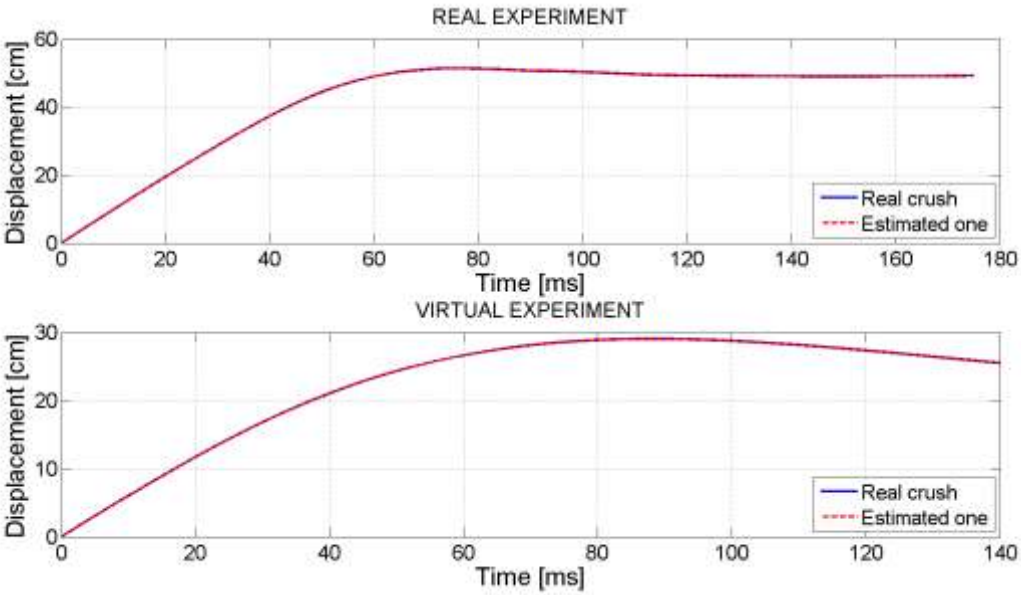

FIGURE 21. Comparative analysis of the measured crush and the one predicted by the AR model for real and virtual experiment.

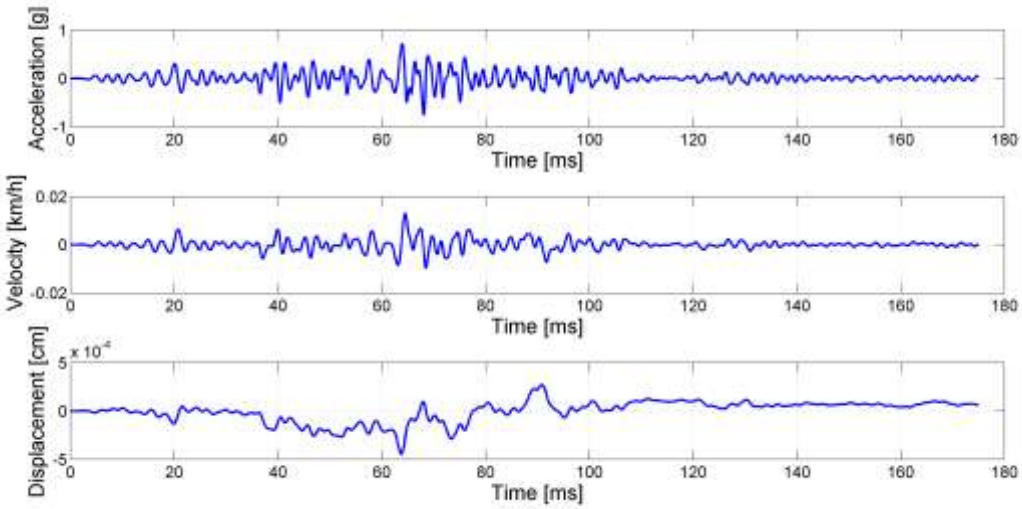

FIGURE 22. AR model's prediction errors for a real car.

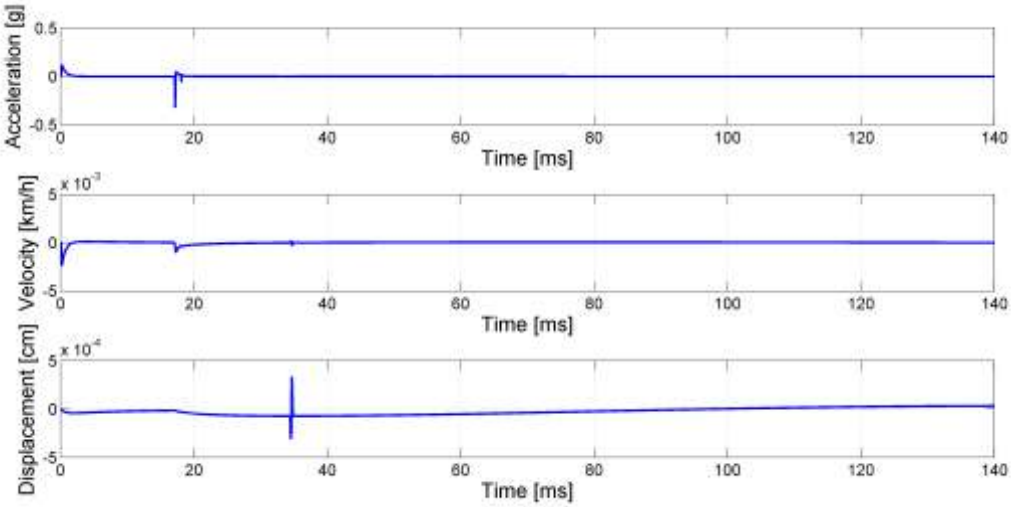

FIGURE 23. AR model's prediction errors for a virtual car.

8. CONCLUSIONS AND FUTURE WORK

The first conclusion which arises from this paper is that the estimation of the parameters of the physical system described here (Kelvin model used to simulate the car to pole collision) by the means of the regressive models, is not the appropriate method. Due to the fact that as an input to such a system one needs to use the recorded acceleration signal taken with the opposite sign, the significance of the model itself is diminished. Therefore the predicted parameters are relatively low to make it possible for the model to directly follow the input acceleration signal. On the other hand, the performance of each parametric model used in this paper (ARMAX and AR) is satisfactory. It should be noted that it may be possible to simplify presented regressive systems, since factors n_a, n_b, and n_c influence the models' fidelity. Therefore some further adjustments of those parameters may lead us to formulate models with a lower degree of complexity with the same fidelity. We clearly see that the selection of the data set which we use to formulate a model (input to RARMAX, ARMAX or AR model), i.e. displacement or acceleration, is not very important since those quantities are derived from each other and are treated as the real world system's output. For that reason they can be used interchangeably in the models' creation process. What determines the simulation results in the case of RARMAX model is the forgetting factor. This factor should be adjusted in such a way that the models' response is satisfactory while at the same time fulfilling all the necessary assumptions (e.g. as in our case - the values of springs stiffness and damping coefficient should be greater than zero). It is also of paramount importance that the regressive models are able to reproduce the whole crash event - i.e. a model established for one set of data (e.g. acceleration pulse) successfully follows also graphs of velocity and displacement of the same car. The last key issue is application of a model formulated for one collision type to predict the kinematic responses of another car under different collision circumstances as in the case of AR model.

Nonlinear viscoelastic models can be investigated and their performance in the variety of crash events should be assessed. It is also advisable to formulate a model which can be applied for different initial impact velocities, i.e. not only suitable for low-speed collisions but for the high-speed impacts as well. Concerning the AR model elaborated in this work, it would be beneficial to validate it for a larger number of full-scale crash test data in different crash scenarios. Such extensive model's performance analysis will help to assess its robustness and further eliminate prediction inaccuracies.

REFERENCES

Belytschko T., 1992. On computational methods for crashworthiness. Computers and Structure.

Borovinsek M., Vesenjak M., Ulbin M., and Ren Z., 2007. Simulation of crash tests for high containment levels of road safety barriers. Engineering Failure Analysis, 14(8), pp. 1711-1718.

Deb A. and Srinivas K.C., 2008. Development of a new lumped - parameter model for vehicle side -impact safety simulation. In Proceedings of the Institution of Mechanical Engineers, Part D: Journal of Automobile Engineering, volume 222, pp. 1793-1811.

Eskandarian A., Marzougui D., and Bedewi N.E., 1997. Finite element model and validation of a surrogate crash test vehicle for impacts with roadside objects. National Crash Analysis Center Technical Paper. Virginia, USA.

Harb R., Radwan E., Yan X., and Abdel-Aty M., 2007. Light truck vehicles contribution to rear-end collisions. Accident Analysis and Prevention, 39(5), pp. 1026-1036.

Huang M., 2002. Vehicle Crash Mechanics. CRC Press, Boca Raton,.

Kamal M., 1970, Analysis and simulation of vehicle to barrier impact. SAE 700414.

Kim H.S., Kang S.Y., Lee I.H., Park S.H., and Han D.C., 1996. Vehicle Frontal Crashworthiness Analysis by Simplified Structure Modeling using Nonlinear Spring and Beam Elements. International Journal of Crashworthiness. 2(1), pp. 107-118.

Mendrok K., 2010. Signal analysis and identification - lectures. AGH University of Science and Technology, Kraków, Poland.

Moumni Z. and Axisa F., 2004. Simplified modelling of vehicle frontal crashworthiness using a modal approach. International Journal of Crashworthiness. 9(3), pp. 285-297.

Pawlus W., Nielsen J.E,, 2010. Development of mathematical models for vehicle to pole collision. Shaker Publishing, Maastricht. ISBN 978-90-423-0401-7.

Pawlus W., Nielsen J.E., Karimi H.R., and Robbersmyr K.G., 2010a. Further results on mathematical models of vehicle localized impact. The 3rd International Symposium on Systems and Control in Aeronautics and Astronautics, Harbin, China.

Pawlus W., Nielsen J.E., Karimi H.R., and Robbersmyr K.G., 2010b. Mathematical modeling and analysis of a vehicle crash. The 4th European Computing Conference, Bucharest, Romania.

Pawlus W., Nielsen J.E., Karimi H.R., and Robbersmyr K.G., 2010c. Comparative analysis of vehicle to pole collision models established using analytical methods and neural networks. The 5th IET International System Safety Conference. Manchester, UK.

Pawlus W., Karimi H.R., and Robbersmyr K.G., 2010d. Mathematical modeling of a vehicle crash test based on elasto-plastic unloading scenarios of spring-mass models, International Journal of Advanced Manufacturing Technology, DOI: 10.1007/s00170-010-3056-x.

Robbersmyr K.G., 2004. Calibration test of a standard ford fiesta 1.1l, model year 1987, according to NS - EN 12767. Technical Report 43/2004, Agder University College, Grimstad.

Söderström T. and Stoica P., 1989. System Identification. Prentice Hall, Upper Saddle River, N.J.

Soica A. and Lache S., 2007. Theoretical and experimental approaches to motor vehicle: Pedestrian collision. The 3rd WSEAS International Conference on Applied and Theoretical Mechanics, Spain.

Soto C.A., 2004. Structural topology optimization for crashworthiness. International Journal of Crashworthiness. 9(3), pp. 277-284.

Šušteršic G., Grabec I., and Prebil I., 2007. Statistical model of a vehicle-to-barrier collision. International Journal of Impact Engineering, 34(10), pp. 1585-1593.

Tenga T.L., Changb F.A., Liuc Y.S., Peng C.P., 2008. Analysis of dynamic response of vehicle occupant in frontal crash using multibody dynamics method. Mathematical and Computer Modelling. 48(11-12), pp. 1724-1736.

Trusca D., Soica A., Benea B., and Tarulescu S., 2009. Computer simulation and experimental research of the vehicle impact. WSEAS Transactions on Computers, 8(1), pp. 1185-1194.

Vangi D., 2009. Energy loss in vehicle to vehicle oblique impact. International Journal of Impact Engineering, 36(3), pp. 512-521.

Varat M.S. and Husher S. E., 2000. Crash pulse modeling for vehicle safety research. 18th ESV.

Zhang X.Y., Jin X.L., and Shen J., 2006. Virtual reconstruction of two types of traffic accident by the tire marks. Lecture Notes Comput Sci 4282.